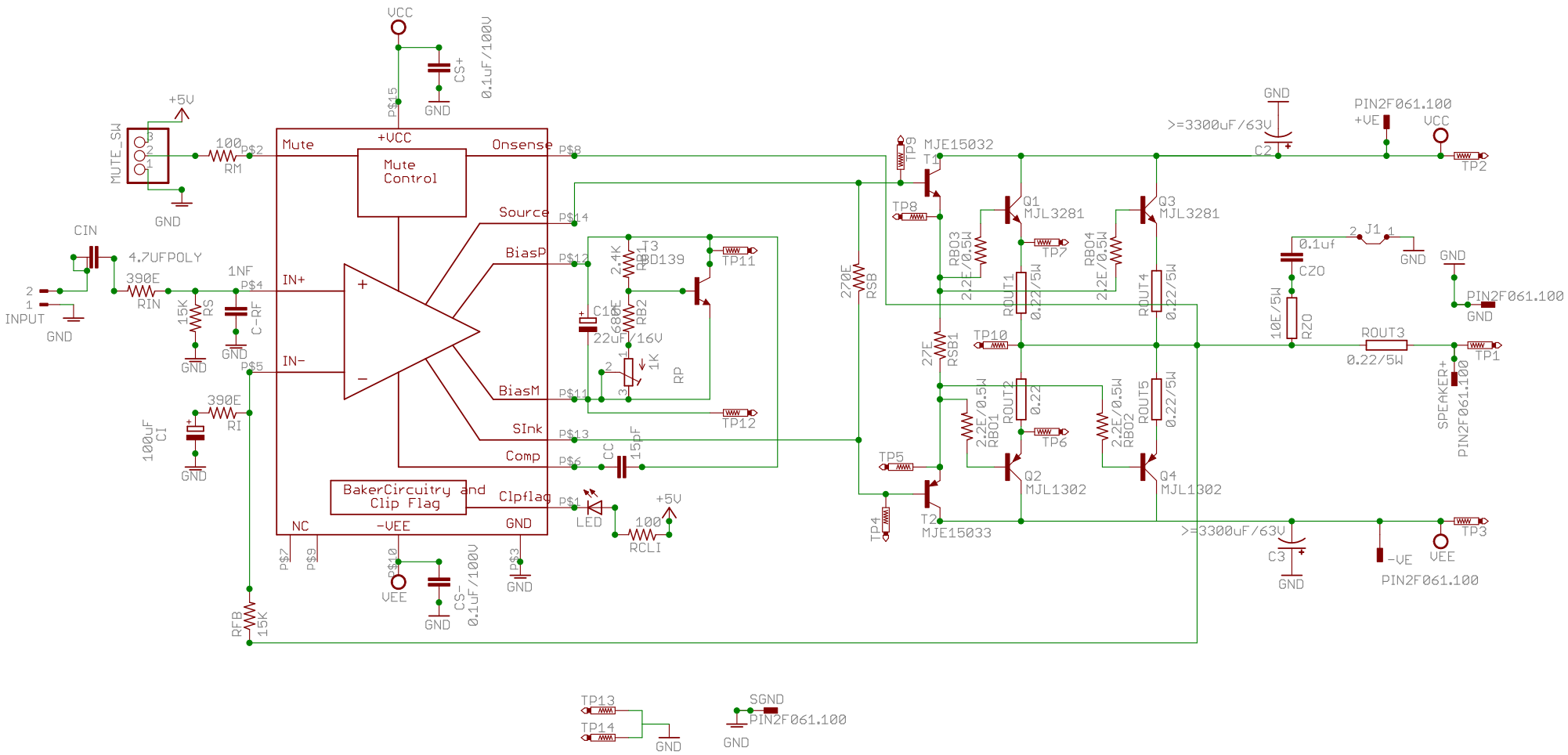
VCC
CS+
0.1uF/100V
GND
P$15
+5V
MUTE_SW
100
RM
P$2
Mute
+VCC
Mute Control
Onsense
P$8
Source
P$14
BiasP
P$12
BiasM
P$11
SInk
P$13
Comp
P$6
BakerCircuitry and Clip Flag
Clpflag
P$1
NC
-VEE
GND
P$7
P$9
P$10
P$3
VEE
CS-
0.1uF/100V
RFB
15K
CIN
4.7UFPOLY
INPUT
390E
RIN
1NF
P$4
IN+
IN-
P$5
15K
RS
C-RF
390E
RI
100uF
CI
2.4K
RB1
BD139
T3
TP11
C1
680E
RB2
22UF/16V
1K
RP
TP12
CC
15pF
LED
100
RCLI
TP9
MJE15032
T1
TP8
Q1
MJL3281
Q3
MJL3281
RBO3
2.2E/0.5W
TP7
RBO4
2.2E/0.5W
ROUT1
0.22/5W
ROUT4
0.22/5W
270E
RSB
27E
RSB1
TP10
ROUT2
0.22
ROUT5
0.22/5W
RBO1
2.2E/0.5W
TP6
RBO2
2.2E/0.5W
TP5
Q2
MJL1302
Q4
MJL1302
TP4
T2
MJE15033
>=3300uF/63V
C2
C3
PIN2F061.100
+VE
-VE
TP2
TP3
0.1uf
CZO
J1
10E/5W
RZO
ROUT3
0.22/5W
TP1
SPEAKER+
TP13
TP14
SGND